E-MX

CONNECTED LOADS

MODEL/ STEAM OUTPUT *(kg/h)**	10	20	40	60	80	100	130	160	200	260	320
Heat output *(kW)*	8	16	32	48	67	80	107	120	160	200	240
Electrical power *(kW)*	8,7	16,7	32,7	48,7	67,7	80,7	107,7	120,7	160,7	200,7	240,7
Electrical connections**	1								2		

The following services are incurred depending on the design.

Electrical power control voltage 230 VAC (option MX-CPA) *(kW)*	0,25	
Electrical power cooling unit *(kW)*	0,95	1,45
Electrial power feed water heating *(kW)*	9 / 18	9 / 18 / 27 / 36
Operating voltage	380-480 V · 50/60 Hz	

*based on feed water temperature of 10 °C and 0,6 MPa (6 bar) steam overpressure

**A separate fuse is required for each connection. The connection cross-section is to be sized according to the electrical power and the on-site conditions (max. 120 mm²).

WE'D BE HAPPY TO ASSIST YOU!

CERTUSS
Dampfautomaten
GmbH & Co. KG

Phone: +49 (0)2151 578-235
E-mail: verkauf@certuss.com
www.certuss-emx.com

22.044.02.2648.02

ELECTRIC STEAM GENERATOR

THE PERFORMANCE CLASS

GENERATION E

[TECHNICAL DATASHEET]

www.certuss-emx.com

E-MX
TECHNICAL DATA

E-MX
CONNECTION SIZES

CERTUSS

MODEL/ STEAM OUTPUT *(kg/h)**	10	20	40	60	80	100	130	160	200	260	320
Heat output *(kW)*	8	16	32	48	67	80	107	120	160	200	240
Water volume *(l)*	37 (NW=18,5)			45 (NW=28,9)					89 (NW=56,7)		
Measures *(mm)*	Height (A) Width (B) Depth (C)	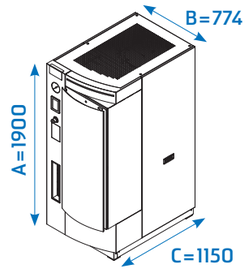							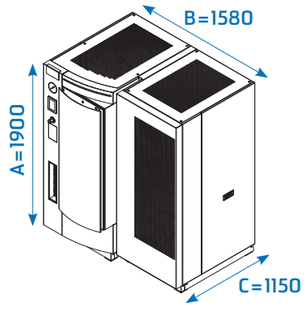		
Empty weight *(kg)*	400			550					850		
Operating weight *(kg)*	520			630					960		
Design pressue	4 bar / 0,4 MPa										
	6 bar / 0,6 MPa										
	10 bar / 1,0 MPa										
	12 bar / 1,2 MPa										
	13 bar / 1,3 MPa										
	16 bar / 1,6 MPa										
Working pressure min. / max.	3,0 / 3,5 bar · 0,3 / 0,35 MPa										
	3,5 / 5,5 bar · 0,35 / 0,55 MPa										
	3,5 / 9,0 bar · 0,35 / 0,90 MPa										
	3,5 / 11,0 bar · 0,35 / 1,1 MPa										
	3,5 / 11,8 bar · 0,35 / 1,18 MPa										
	3,5 / 14,5 bar · 0,35 / 1,45 MPa										

CATEGORY

In accordance to DGRL2014/68/EU	*4 bar*	II	III
	6–16 bar	III	III
In accordance to BetrSichV	*4 bar*	II	III
	6–10 bar	III	III
	12-16 bar	III	IV

MODEL/ STEAM OUTPUT *(kg/h)**	10	20	40	60	80	100	130	160	200	260	320
Steam outlet	1/2"								1"		
Soft water connection	1/2"										
Safety valve	*4–6 bar*	1"							1 1/4"		
	10–13 bar	1"							1"		
	16 bar	1"							1 1/4"		
Blow down / desalination line	1/2"										
Overflow / drainage feed water tank	1"										
Condensate return	1"										
Vapor vent line	1"										

VOLUME

Volume feed water tank	45,5 ltr.

MATERIAL

Pressure vessel	P235GH / Stainless steel (AISI 316Ti)
Feed water tank	Stainless steel (AISI 316Ti)
Armatures	Brass / Stainless steel (AISI 316L/AISI 316Ti)
Housing	S235JR / Stainless steel (AISI 304)